Multivariable Mass Vortex Flow Meter

Innova-Mass® Model 240 & 241

Features

- Volumetric or mass flow monitoring of gases, liquids and steam
- Smart electronics extends range down to a Reynolds number of 5000
- Ideal for steam applications
- Selectable outputs for five process parameters in one integrated meter:
  - –mass flow rate
  - –volumetric flow rate
  - –temperature
  - –pressure
  - –density
- Field-configurable ranges, alarms, outputs and displays
- Field configurable via six push buttons or magnet through explosion-proof window
- Rangeability up to 30:1
- Temperature up to 750° F
- Pressure up to 1500 psig
- In-line (1/2" to 8") and insertion (into pipes > 2") configurations
- FMC and ATEX approval
- Flow computer integrates AGA-8 equations for natural gas
- Full implementation of HART protocol
- Optional MODBUS protocol

SIERRA® INSTRUMENTS
THE MASS FLOW COMPANY

ISO REGISTERED 9001

q

For information online...
www.sierrainstruments.com

Description

Sierra Instruments' Innova-Mass® Multivariable mass vortex flow meter provides a reading of up to five process parameters from a single entry point in the pipeline. The meter can measure the fluid's velocity, temperature, and pressure and calculate mass flow rate, volumetric flow rate and density. Sensing all process parameters at a single location in one integrated meter greatly improves measurement accuracy and reduces total installed cost.

The Innova-Mass Model 240 in-line meters are available in 0.5, 0.75, 1, 1.5, 2, 3, 4, 6 and 8-inch sizes with ANSI or DN16 flanges or wafer flow bodies. The Series 241 insertion meters can be used on pipe sizes from two inches and greater. Optional "hot-tap" hardware including packing gland probe seal, retractor, and isolation valves is also available.

In-Line Dimensional Specifications

240 Flanged In-line–Side View

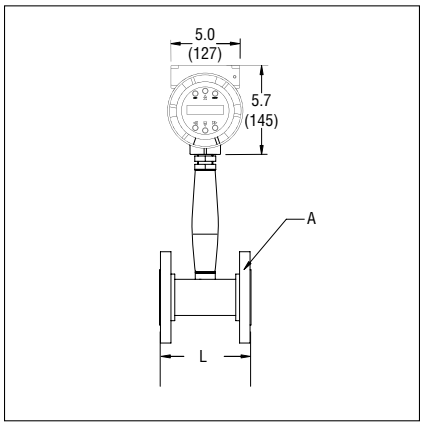

240 Flanged In-line–Outlet View

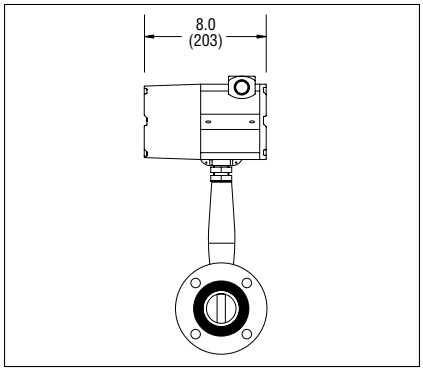

240 Wafer–Side View

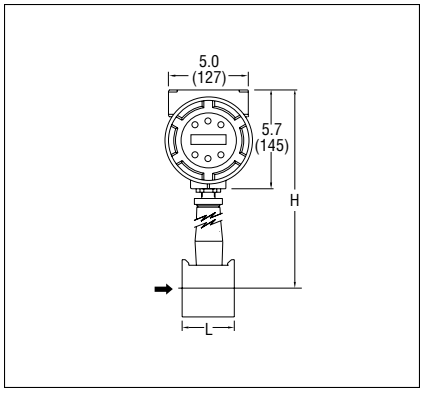

240 Wafer–Outlet View

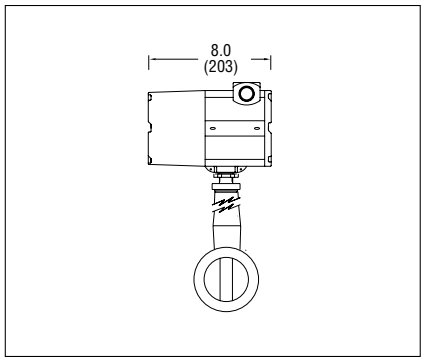

In-Line Table

240 INNOVA-FLO® SIZES			
Flow Body Size	**A**	**L**	**H**
0.5-inch SCH. 80	150 lb Flange	4.56 (116)	14.8 (376)
	300 lb Flange	4.56 (116)	14.8 (376)
	600 lb Flange	4.56 (116)	14.8 (376)
	1.4 Wafer O.D.	4.56 (116)	14.8 (376)
0.75-inch SCH. 80	150 lb Flange	4.8 (122)	15.0 (381)
	300 lb Flange	4.8 (122)	15.0 (381)
	600 lb Flange	4.8 (122)	15.0 (381)
	1.7 Wafer O.D.	4.8 (122)	15.0 (381)
1-inch SCH. 80	150 lb Flange	4.94 (126)	15.0 (381)
	300 lb Flange	4.94 (126)	15.0 (381)
	600 lb Flange	4.94 (126)	15.0 (381)
	2.0 Wafer O.D.	2.8 (71)	14.8 (376)
1.5-inch SCH. 80	150 lb Flange	5.5 (140)	15.1 (384)
	300 lb Flange	5.5 (140)	15.1 (384)
	600 lb Flange	5.5 (140)	15.1 (384)
	2.9 Wafer O.D.	2.8 (71)	15.1 (384)
2-inch SCH. 80	150 lb Flange	6.0 (153)	15.3 (389)
	300 lb Flange	6.0 (153)	15.3 (389)
	600 lb Flange	6.0 (153)	15.3 (389)
	3.7 Wafer O.D.	3.0 (76)	15.3 (389)
3-inch SCH. 80	150 lb Flange	6.9 (175)	15.8 (401)
	300 lb Flange	6.9 (175)	15.8 (401)
	600 lb Flange	6.9 (175)	15.8 (401)
	5.0 Wafer O.D.	4.0 (102)	15.8 (400)
4-inch SCH. 80	150 lb Flange	8.0 (203)	16.2 (411)
	300 lb Flange	8.0 (203)	16.2 (411)
	600 lb Flange	8.0 (203)	16.2 (411)
	6.2 Wafer O.D.	4.7 (119)	16.2 (412)
6-inch SCH. 80	150 lb Flange	9.0 (229)	17.3 (439)
	300 lb Flange	9.0 (229)	17.3 (439)
	600 lb Flange	9.0 (229)	17.3 (439)
8-inch SCH. 80	150 lb Flange	10.5 (267)	18.2 (462)
	300 lb Flange	10.5 (267)	18.2 (462)
	600 lb Flange	10.5 (267)	18.2 (462)

All dimensions are inches. Millimeters are in parentheses. Certified drawings are available on request.

Insertion Dimensional Specifications

Gate Valve

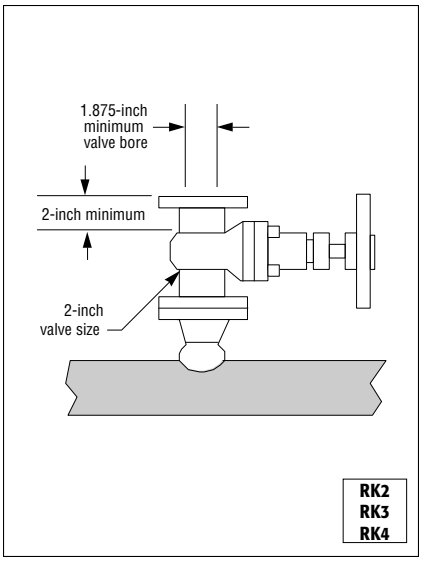

Insertion Table

Model Code / Probe Seal / Process Connection
CM / Compression / Two-inch Male NPT
CF / Compression / 150 lb flange
CG / Compression / 300 lb flange
CH / Compression / 600 lb flange
PM / Packing Gland / Two-inch Male NPT [1]
PMR / Packing Gland / Two-inch Male NPT with Retractor [2]
PF / Packing Gland / 150 lb flange [1]
PFR / Packing Gland / 150 lb flange with Retractor [2]
PG / Packing Gland / 300 lb flange [1]
PGR / Packing Gland / 300 lb flange with Retractor [2]
PHR / Packing Gland / 600 lb flange with Retractor [2]

Notes: (1) Can be used with removable retractor.
(2) Retractor is permanently mounted to meter.

241 Compression, Flange

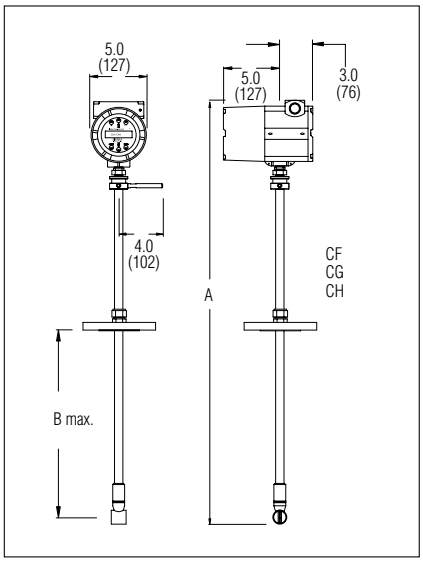

241 Compression, Male NPT

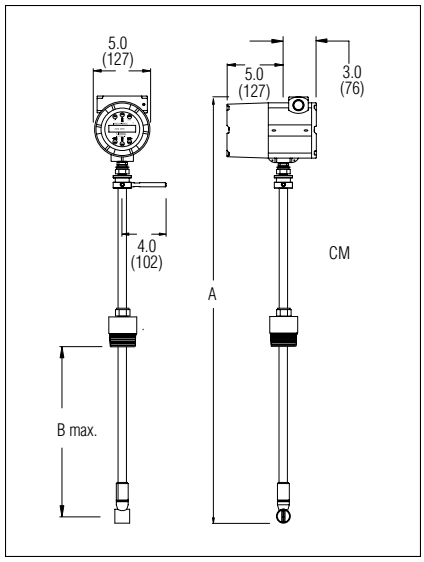

241 Packing Gland, Flange

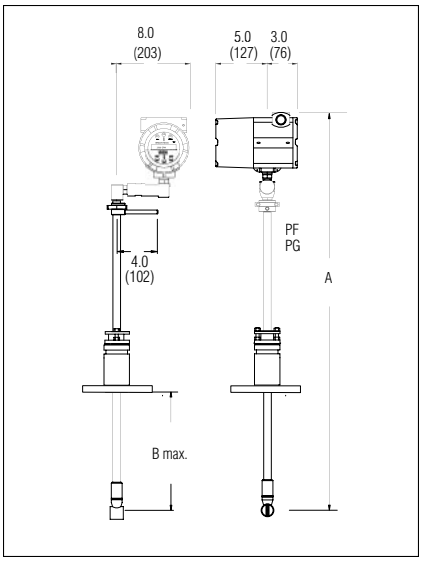

241 Packing Gland, Male NPT, Retractor

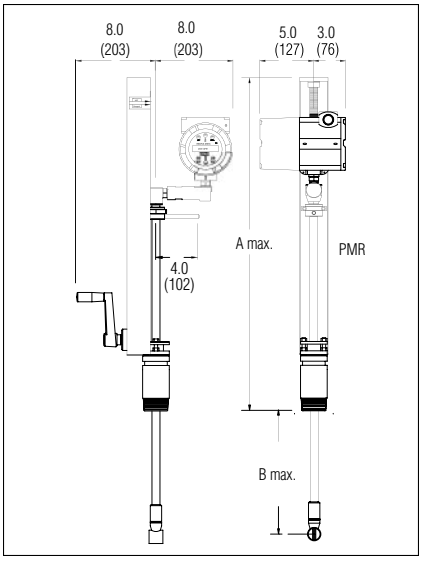

241 Packing Gland, Male NPT

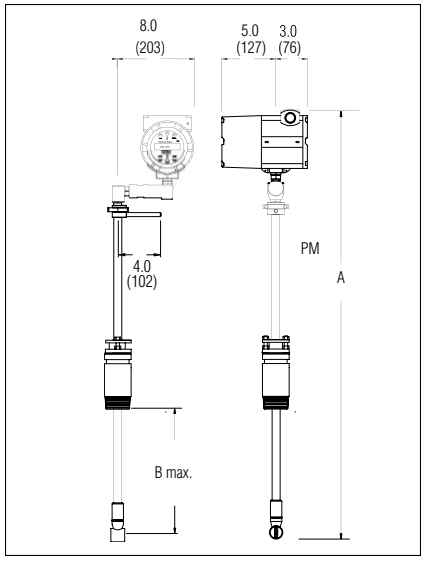

241 Packing Gland, Flange, Retractor

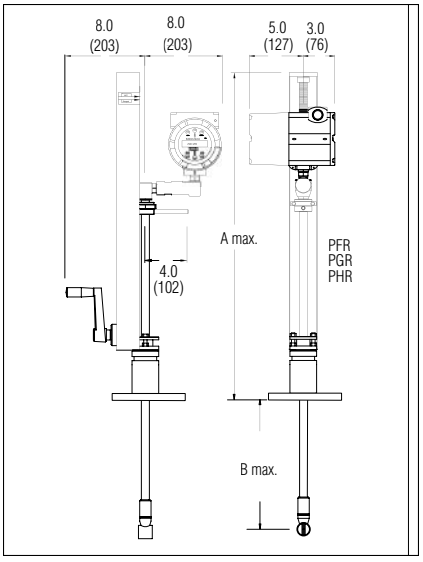

241 INNOVA-MASS® SIZES						
	Standard Probe		Compact Probe		Extended Probe	
	A	B	A	B	A	B
	41.0 (1041.0)	26.2 (665.0)	24.6 (625.0)	9.8 (249.0)	53.0 (1340.0)	38.2 (920.0)
	41.0 (1041.0)	27.3 (639.0)	24.6 (625.0)	10.9 (277.0)	53.0 (1340.0)	39.3 (998.0)
	41.0 (1041.0)	27.2 (691.0)	24.6 (625.0)	10.8 (274.0)	53.0 (1340.0)	39.2 (996.0)
	41.0 (1041.0)	26.8 (681.0)	24.6 (625.0)	10.4 (264.0)	53.0 (1340.0)	38.8 (986.0)
	40.5 (1029.0)	21.5 (546.0)	N/A	N/A	52.5 (1334.0)	33.5 (850.9)
	40.5 (1029.0)	21.5 (546.0)	N/A	N/A	52.5 (1334.0)	33.5 (850.9)
	40.5 (1029.0)	21.1 (536.0)	N/A	N/A	52.5 (1334.0)	33.1 (841.0)
	40.5 (1029.0)	21.1 (536.0)	N/A	N/A	52.5 (1334.0)	33.1 (841.0)
	40.5 (1029.0)	21.1 (536.0)	N/A	N/A	52.5 (1334.0)	33.1 (841.0)
	40.5 (1029.0)	21.1 (536.0)	N/A	N/A	52.5 (1334.0)	33.1 (841.0)
	40.5 (1029.0)	21.1 (536.0)	N/A	N/A	52.5 (1334.0)	33.1 (841.0)

Dimensional Specifications

240/241 Remote–Front View

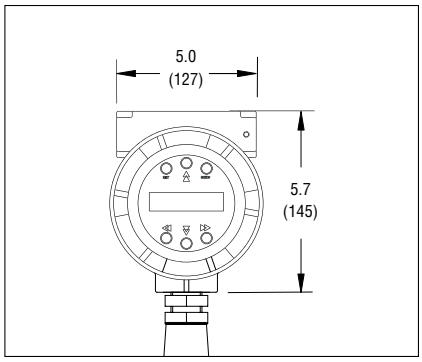

240/241 Remote–Side View

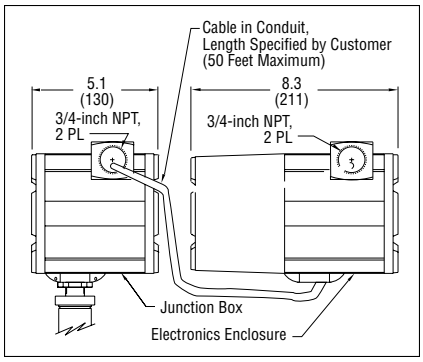

Remote Rear Bracket Mounted Electronics

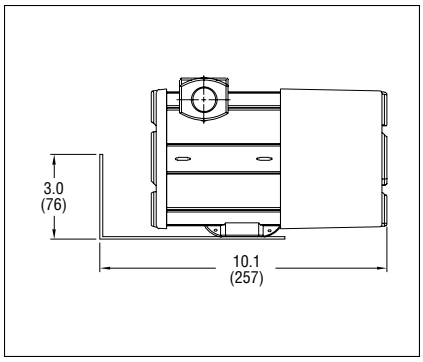

Mounting Holes for Remote Rear Bracket

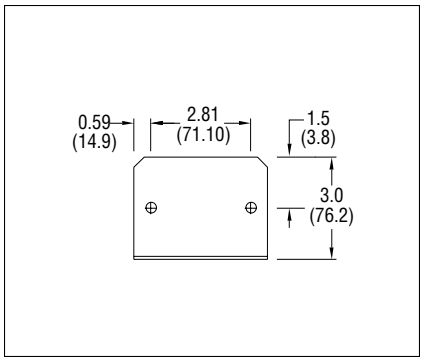

STRAIGHT PIPE LENGTH REQUIREMENTS (In Number of Internal Diameters, D)		
	Upstream	Downstream
One 90° elbow before meter	10 D	5 D
Two 90° elbows before meter	15 D	5 D
Two 90° elbows before meter out of plane (If three 90° bends present, double recommend length)	25 D	10 D
Reduction before meter	10 D	5 D
Expansion before meter	20 D	5 D
Regulator or valve partially closed before meter (If valve wide open, base length requirements on fitting directly preceding it)	25 D	10 D

Weight

240 IN-LINE METER						
Connection Size	ANSI 150 lb		ANSI 300 lb		ANSI 600 lb	
	lb	kg	lb	kg	lb	kg
0.5-inch flange	12.0	5.5	12.5	5.7	13	5.9
0.75-inch flange	13.0	5.9	14.0	6.4	14.5	6.6
1-inch flange	13.5	6.1	16.4	7.4	16.4	7.4
1.5-inch flange	14.6	6.6	22.7	10.3	24.8	11.2
2-inch flange	19.5	8.8	26.9	12.2	33.2	15.1
3-inch flange	27.5	12.5	39.5	17.9	56.3	25.5
4-inch flange	43.5	19.7	60.5	27.4	96.2	43.6
6-inch flange	48.4	22.0	96.2	43.6	178	80.8
8-inch flange	71.0	32.2	149	67.4	300	136
1-inch wafer	—	—	—	—	10.1	4.6
1.5-inch wafer	—	—	—	—	11.8	5.4
2-inch wafer	—	—	—	—	14.2	6.4
3-inch wafer	—	—	—	—	22.7	10.3
4-inch wafer	—	—	—	—	33.0	15.0

241 INSERTION METER		
Connection Size	lb	kg
Compression Fitting, Male NPT	13.8	6.2
Compression Fitting, 150 lb Flange	16.3	7.3
Compression Fitting, 300 lb Flange	18.3	8.3
Compression Fitting, 600 lb Flange	19.3	8.7
Packing Gland, Male NPT	15.8	7.1
Packing Gland, Male NPT with Retractor	25.3	11.5
Packing Gland, 150 lb Flange	20.8	9.4
Packing Gland, 150 lb Flange with Retractor	30.3	13.7
Packing Gland, 300 lb Flange	24.8	11.3
Packing Gland, 300 lb Flange with Retractor	34.3	15.5
Packing Gland, 600 lb Flange with Retractor	35.3	16.0

All dimensions are inches. Millimeters are in parentheses. Certified drawings are available on request.

Performance Specifications

Accuracy

Process Variables	240 Series In-Line Meters		241 Series Insertion Meters[1]	
	Liquids	Gas and Steam	Liquids	Gas and Steam
Mass Flow Rate	+/- 1% of rate over a 30:1 range[3]	+/- 1.5% of rate[2] over a 30:1 range[3]	+/- 1.5% of rate over a 30:1 range[3]	+/- 2% of rate[2] over a 30:1 range[3]
Volumetric Flow Rate	+/- 0.7% of rate over a 30:1 range[3]	+/- 1% of rate over a 30:1 range[3]	+/- 1.2% of rate over a 30:1 range[3]	+/- 1.5% of rate over a 30:1 range[3]
Temperature	+/- 2° F (+/- 1° C)	+/- 2° F (+/- 1° C)	+/- 2° F (+/- 1° C)	+/- 2° F (+/- 1° C)
Pressure	0.4% of transducer full scale	0.4% of transducer full scale	0.4% of transducer full scale	0.4% of transducer full scale
Density	0.3% of reading	0.5% of reading[2]	0.3% of reading	0.5% of reading[2]

Notes: (1) Accuracies stated are for the total mass flow through the pipe.
(2) Over 50 to 100% of the pressure transducer's full scale.
(3) Nominal rangeability is stated. Precise rangeability depends on fluid and pipe size.

Repeatability

Mass Flow Rate..... +/- 0.2% of reading
Volumetric Flow Rate . +/- 0.1% of reading
Temperature..... +/- 0.2° F (+/- 0.1° C)
Pressure ..... +/- 0.05% of full scale
Density ..... +/- 0.1% of reading

Stability Over 12 Months

Mass Flow Rate..... +/- 0.2% of reading maximum
Volumetric Flow Rate . Negligible error
Temperature..... +/- 0.1° F (+/- 0.5° C) maximum
Pressure ..... +/- 0.1% of full scale maximum
Density ..... +/- 0.1% of reading maximum

Response Time

Adjustable from 1 to 100 seconds

Operating Specifications

Material Compatibility

240 ..... Any gas, liquid or steam compatible with 316L stainless steel, C276 Hastalloy® or A105 carbon steel. Not recommended for multi-phase fluids.

241 ..... Any gas, liquid or steam compatible with 316L stainless steel. Not recommended for multi-phase fluids.

Flow Rates

Typical mass flow ranges are given in the following table. Precise flow ranges depend on the fluid and pipe size. 241 insertion meters are applicable to pipe sizes from 2-inch and greater. Consult factory for sizing program.

WATER MINIMUM AND MAXIMUM FLOW RATES									
	0.5-In.	0.75-In.	1-Inch	1.5-Inch	2-Inch	3-Inch	4-Inch	6-Inch	8-Inch
gpm	0.9	3	2.2	5.5	9.2	21	36	81	142
	22	40	67	166	276	618	1076	2437	4270
m^3/hr	0.2	0.7	0.5	1.3	2.1	4.7	8.1	18	32
	5	9	15	38	63	140	244	554	970

AIR MINIMUM AND MAXIMUM FLOW RATES (scfm) [1]									
Pressure	0.5-In.	0.75-In.	1-Inch	1.5-Inch	2-Inch	3-Inch	4-Inch	6-Inch	8-Inch
0 psig	1.8	3	5	13	22	50	88	198	347
	17	40	90	221	369	826	1438	3258	5708
100 psig	4.9	9	15	37	62	138	240	543	952
	135	318	701	1728	2879	6447	11222	25421	44536
200 psig	7	12	20	50	83	185	322	730	1279
	255	608	1313	4740	5389	12067	21006	47585	67122
300 psig	8.5	15	24	59	98	220	382	866	1518
	375	893	1924	4750	7900	17687	30789	48821	64552
400 psig	10	17	27	66	110	247	430	975	1708
	500	1178	2535	6246	10410	23308	31141	46884	61990
500 psig	11	21	29	72	120	270	469	1063	1862
	620	1464	3147	7752	12920	22592	29834	44915	59387

Note: (1) Standard conditions are 70° F and 1 atmosphere.

SATURATED STEAM MINIMUM AND MAXIMUM FLOW RATES (lb/hr)									
Pressure	0.5-In.	0.75-In.	1-Inch	1.5-Inch	2-Inch	3-Inch	4-Inch	6-Inch	8-Inch
5 psig	5.7	12	20	49	82	183	319	722	1265
	52	122	265	652	1087	2434	4237	9598	16815
100 psig	7.1	28	46	112	187	419	729	1651	2893
	270	639	1385	3413	5688	12735	22168	50219	87980
200 psig	13	37	61	151	252	565	984	2229	3905
	495	1164	2524	6217	10362	23200	40385	91485	160275
300 psig	19	45	74	182	304	681	1185	2685	4704
	718	1690	3662	9021	15035	33664	58601	132750	232570
400 psig	25	52	85	209	349	781	1359	3078	5393
	944	2220	4814	11859	19764	44253	77033	174505	305721
500 psig	30	58	95	233	389	870	1515	3433	6014
	1176	2640	5986	14745	24575	55025	95784	216983	331080

Differential Pressure Requirements, △P

Permanent pressure loss of in-line meters for air at 68°F (20°C) and 14.70 psi (1.104 bara).
Permanent pressure loss of in-line meters for water at 68°F (20°C).

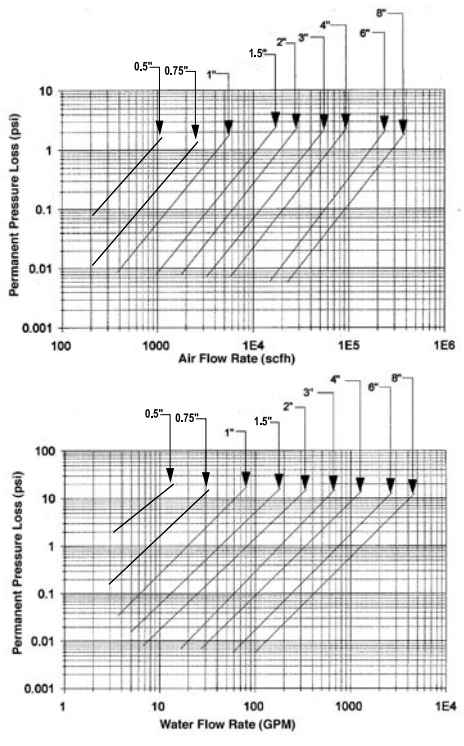

Linear Range

Smart electronics corrects for lower flow down to a Reynolds number of 5,000. The Reynolds number is calculated using the fluid's actual temperature and pressure monitored by the meter. Rangeability depends on the fluid, process connections and pipe size. Consult factory for your application. Velocity rangeability under ideal conditions is as follows:

Liquids 30:1 . . . . . 1 foot per second velocity minimum
30 feet per second velocity maximum
Gases 30:1 . . . . . 10 feet per second velocity minimum
300 feet per second velocity maximum

Process Fluid Pressure

240 PRESSURE RATINGS		
PROCESS CONNECTION	MATERIAL	RATING
Flanged	316L SS, A105 Carbon Steel, C276 Hastalloy®	150, 300, 600 lb
Wafer	316L SS, A105 Carbon Steel, C276 Hastalloy®	600 lb

241 PRESSURE RATINGS				
Probe Seal	Process Connection	Material	Rating	Ordering Code
Compression Fitting	2-inch Male NPT	316 L SS	ANSI 600 lb	CM
	2-inch 150 lb flange	316 L SS	ANSI 150 lb	CF
	2-inch 300 lb flange	316 L SS	ANSI 300 lb	CG
	2-inch 600 lb flange	316 L SS	ANSI 600 lb	CH
Packing Gland	2-inch Male NPT	316 L SS	50 psig	PM
	2-inch 150 lb flange	316 L SS	50 psig	PF
	2-inch 300 lb flange	316 L SS	50 psig	PG
Packing Gland with Removable Retractor	2-inch Male NPT	316 L SS	ANSI 300 lb	PM, RR
	2-inch 150 lb flange	316 L SS	ANSI 150 lb	PF, RR
	2-inch 300 lb flange	316 L SS	ANSI 300 lb	PG, RR
Packing Gland with Permanent Retractor	2-inch Male NPT	316 L SS	ANSI 600 lb	PMR
	2-inch 150 lb flange	316 L SS	ANSI 150 lb	PFR
	2-inch 300 lb flange	316 L SS	ANSI 300 lb	PGR
	2-inch 600 lb flange	316 L SS	ANSI 600 lb	PHR

Pressure Transducer Ranges

PRESSURE SENSOR RANGES(1), psia(bara)			
Full Scale Operating Pressure		Maximum Over-Range Pressure	
psia	(bara)	psia	(bara)
30	2	60	4
100	7	200	14
300	20	600	41
500	34	1000	69

Note: (1) To maximize accuracy, specify the lowest full scale operating pressure range for the application. To avoid damage, the flow meter must never be subjected to pressure above the over-range pressure shown above.

Power Requirements

12 to 36 VDC, 100 mA (add 20mA per output up to 60mA)
100 to 240 VAC, 50/60 Hz, 25 watts

Display

Alphanumeric 2 x 16 LCD digital display
Six push buttons switches (up, down, right, left, enter, exit) operable through the display glass of the explosion-proof enclosure Viewing at 90° mounting intervals

Teflon is a registered trademark of DuPont.

Process Fluid & Ambient Temperature

Process Fluid. . . . . Standard Temperature Sensor:
-40°F to 400°F (-40° to 205°C)
High Temperature Sensor:
250°F to 750°F (120° to 400°C)
Ambient . . . . . Operating: -5°F to 140°F (–20° to 60°C)
Storage: –40°F to 150°F (–40° to 65°C)
0-98% relative humidity, non-condensing conditions

Output Signals(1)

Analog. . . . . One to three field rangeable, simultaneous linear 4-20 mA output signals (1000 ohms maximum loop resistance) selected by user from the five parameters–mass flow rate, volumetric flow rate, temperature, pressure and density
Pulse . . . . . Pulse output for totalization is a 50-millisecond duration pulse operating a solid-state relay capable of switching 40 VDC, 40 mA maximum HART standard , Optional MODBUS RTU.

Note: (1) All outputs are optically isolated and require external power for operation

Alarms

Up to three programmable solid-state relays for high, low or window alarms capable of switching 40 VDC, 40 mA maximum

Totalizer

Based on user-determined flow units, nine full digits, with rollover at 4, 294, 967, 295. Total stored in non-volatile memory

Physical Specifications

Wetted Materials

240 . . . . . 316L stainless steel standard
C276 hastalloy® or A105 carbon steel optional
Teflon-based thread sealant on pressure transducer
241 . . . . . 316L stainless steel
Teflon® packing gland below 500°F (260°C)
Graphite packing gland above 500°F (260°C)
Teflon-based thread sealant on pressure transducer

Enclosure

NEMA 4X (IP65) cast enclosure

Electrical Ports

Two 3/4-inch female NPT ports

Mounting Connections

240 . . . . . Wafer or 150, 300, 600 lb ANSI flange
241 . . . . . Permanent Installation:
Two inch Male NPT; 150, 300, 600 lb ANSI flange with compression fitting probe seal
Hot Tap(1) Installation:
Two inch Male NPT; 150, 300, 600 lb ANSI flange; and optional retractor with packing gland probe seal

Note: (1) Removable under line pressure.

Mounting Position

240 . . . . . No effect
241 . . . . . Meter must be perpendicular within +/- 5° of the pipe centerline

FMC Approval

Explosion proof for Class I, Division 1, Groups B, C & D.
Dust-ignition proof for Class II/III, Division 1, Groups E, F & G.
NEMA Type 4x and IP66
T6 at Tamb=60°C

ATEX Approval

II 2 G Ex d II B + H2 T6
II 2 D Ex t D A 21 IP66 T6
KEMA 08 ATEX 0143

CE Approval

0344

Optional Certifications

Construction and Inspection (ANSI/ASME B31.3)
Materials (NACE MR-01-75(90)

Ordering the Model 240 In-Line

240 [ ] [ ]

Continued on Next Page >>

PARENT MODEL NUMBER

240 Innova-Mass™ Multivariable In-line Mass Vortex Flow Meter

PROCESS FLUID

V Volumetric Vortex Flow Meter
VT Velocity and Temperature Sensors
VTP Velocity, Temperature and Pressure Sensors
VTEP Velocity and Temperature Sensors with external pressure sensor output
VT EMS VT Meter plus Energy meter Package.
VTP EMS VTP Meters plus Energy meter package.

FLOW BODY–316L STAINLESS STEEL

F2 1/2-inch ANSI 150 lb Flanged, 316L
F3 3/4-inch ANSI 150 lb Flanged, 316L
F4 1-inch ANSI 150 lb Flanged, 316L
F5 1.5-inch ANSI 150 lb Flanged, 316L
F6 2-inch ANSI 150 lb Flanged, 316L
F7 3-inch ANSI 150 lb Flanged, 316L
F8 4-inch ANSI 150 lb Flanged, 316L
F9 6-inch ANSI 150 lb Flanged, 316L
F10 8-inch ANSI 150 lb Flanged, 316L
Also available in C276 Hastalloy. Consult Factory For Pricing/Delivery
G2 1/2-inch ANSI 300 lb Flanged, 316L
G3 3/4-inch ANSI 300 lb Flanged, 316L
G4 1-inch ANSI 300 lb Flanged, 316L
G5 1.5-inch ANSI 300 lb Flanged, 316L
G6 2-inch ANSI 300 lb Flanged, 316L
G7 3-inch ANSI 300 lb Flanged, 316L
G8 4-inch ANSI 300 lb Flanged, 316L
G9 6-inch ANSI 300 lb Flanged, 316L
G10 8-inch ANSI 300 lb Flanged, 316L
Also available in C276 Hastalloy. Consult Factory For Pricing/Delivery
H2 1/2-inch ANSI 600 lb Flanged, 316L
H3 3/4-inch ANSI 600 lb Flanged, 316L
H4 1-inch ANSI 600 lb Flanged, 316L
H5 1.5-inch ANSI 600 lb Flanged, 316L
H6 2-inch ANSI 600 lb Flanged, 316L
H7 3-inch ANSI 600 lb Flanged, 316L
H8 4-inch ANSI 600 lb Flanged, 316L
H9 6-inch ANSI 600 lb Flanged, 316L
H10 8-inch ANSI 600 lb Flanged, 316L
Also available in C276 Hastalloy. Consult Factory For Pricing/Delivery
W2 0.5-inch Wafer connection, 316L
W3 3/4-inch Wafer connection, 316L
W4 1-inch Wafer connection, 316L
W5 1.5-inch Wafer connection, 316L
W6 2-inch Wafer connection, 316L
W7 3-inch Wafer connection, 316L
W8 4-inch Wafer connection, 316L
Also available in C276 Hastalloy. Consult Factory For Pricing/Delivery
FC4 1-inch ANSI 150 lb Flanged, Carbon Steel
FC5 1.5-inch ANSI 150 lb Flanged, Carbon Steel
FC6 2-inch ANSI 150 lb Flanged, Carbon Steel
FC7 3-inch ANSI 150 lb Flanged, Carbon Steel
FC8 4-inch ANSI 150 lb Flanged, Carbon Steel
FC9 6-inch ANSI 150 lb Flanged, Carbon Steel
FC10 8-inch ANSI 150 lb Flanged, Carbon Steel
Also available in C276 Hastalloy. Consult Factory For Pricing/Delivery

FLOW BODY–316L STAINLESS STEEL (CONTINUED)

GC4 1-inch ANSI 300 lb Flanged, Carbon Steel
GC5 1.5-inch ANSI 300 lb Flanged, Carbon Steel
GC6 2-inch ANSI 300 lb Flanged, Carbon Steel
GC7 3-inch ANSI 300 lb Flanged, Carbon Steel
GC8 4-inch ANSI 300 lb Flanged, Carbon Steel
GC9 6-inch ANSI 300 lb Flanged, Carbon Steel
GC10 8-inch ANSI 300 lb Flanged, Carbon Steel
Also available in C276 Hastalloy. Consult Factory For Pricing/Delivery
HC4 1-inch ANSI 600 lb Flanged, Carbon Steel
HC5 1.5-inch ANSI 600 lb Flanged, Carbon Steel
HC6 2-inch ANSI 600 lb Flanged, Carbon Steel
HC7 3-inch ANSI 600 lb Flanged, Carbon Steel
HC8 4-inch ANSI 600 lb Flanged, Carbon Steel
HC9 6-inch ANSI 600 lb Flanged, Carbon Steel
HC10 8-inch ANSI 600 lb Flanged, Carbon Steel
Also available in C276 Hastalloy. Consult Factory For Pricing/Delivery
FD2 DN15/PN16 Flanged, 316L
FD3 DN20/PN16 Flanged, 316L
FD4 DN25/PN16 Flanged, 316L
FD5 DN40/PN16 Flanged, 316L
FD6 DN50/PN16 Flanged, 316L
FD7 DN80/PN16 Flanged, 316L
FD8 DN100/PN16 Flanged, 316L
FD9 DN150/PN16 Flanged, 316L
FD10 DN200/PN16 Flanged, 316L
Also available in C276 Hastalloy. Consult Factory For Pricing/Delivery
GD2 DN15/PN40 Flanged, 316L
GD3 DN20/PN40 Flanged, 316L
GD4 DN25/PN40 Flanged, 316L
GD5 DN40/PN40 Flanged, 316L
GD6 DN50/PN40 Flanged, 316L
GD7 DN80/PN40 Flanged, 316L
GD8 DN100/PN40 Flanged, 316L
GD9 DN150/PN40 Flanged, 316L
GD10 DN200/PN40 Flanged, 316L
Also available in C276 Hastalloy. Consult Factory For Pricing/Delivery
HD2 DN15/PN64 Flanged, 316L
HD3 DN20/PN64 Flanged, 316L
HD4 DN25/PN64 Flanged, 316L
HD5 DN40/PN64 Flanged, 316L
HD6 DN50/PN64 Flanged, 316L
HD7 DN80/PN64 Flanged, 316L
HD8 DN100/PN64 Flanged, 316L
HD9 DN150/PN64 Flanged, 316L
HD10 DN200/PN64 Flanged, 316L
Also available in C276 Hastalloy. Consult Factory For Pricing/Delivery

Ordering the Model 240 In-Line (Continued)

*From Previous Page

ELECTRONICS ENCLOSURE
- **E2** NEMA 4X (IP65) Enclosure - Mounted on Probe
- **E4** Remote Electronics NEMA 4X (IP65) includes NEMA 4X (IP65) on Probe
  Specify cable length in parentheses, maximum 50 feet (17m).

DISPLAY OPTION
- **NR** No Display
- **DD** Digital Display

INPUT POWER
- **PV1L** 12-36 VDC LOOP POWERED (available only with V4LH)
- **PV1** 12-36 VDC
- **PS** 100-240 VAC, 50/60 Hz Line Power, 25 Watts

OUTPUT
- **V4LH** One analog output (4-20 mA), one pulse, HART. LOOP POWERED
- **V4H** One analog output (4-20 mA), one alarm, one pulse and HART Communication. NOT LOOP POWERED
- **V4M** One analog output (4-20 mA), one alarm, one pulse, and MODBUS.
- **V6M** Three analog outputs (4-20 mA), three alarms, one pulse, MODBUS
- **V6H** Three analog outputs (4-20 mA), three alarms, one pulse, HART Protocol Communication

PROCESS TEMPERATURE
- **ST** Standard Temperature
  Process temperature -40° to 500°F (-40° to 260°C)
- **HT** High Temperature
  Process temperature -40° to 750°F (-40° to 400°C)

PROCESS TEMPERATURE
- **MP0** No Pressure Sensor Used with VT process fluid.
- **MP1** Maximum 30 psia (2 bara), Proof 60 psia (4 bara)
- **MP2** Maximum 100 psia (7 bara), Proof 200 psia (14 bara)
- **MP3** Maximum 300 psia (20 bara), Proof 600 psia (41 bara)
- **MP4** Maximum 500 psia (34 bara), Proof 1000 psia (64 bara)
- **MP5** Maximum 1500 psia (100 bara), Proof 1500 psia (100 bara)

ACCESSORIES (Consult Factory) Removable Retractors, Isolated Gate Valves, Mounting Kits, Material Certificates, Pressure Certificates, Certificate of Conformance, NACE Certification

Ordering the Model 241 Insertion

241 [ ] [ ] [ ] [ ] [ ] [ ] [ ]

PARENT MODEL NUMBER

241	Innova-Mass™ Insertion Mass Vortex Flow Meter

PROCESS FLUID

V	Vortex Flow Meter
VT	Velocity and Temperature Sensors
VTP	Velocity, Temperature and Pressure Sensors
VTEP	Velocity and Temperature Sensors with external pressure sensore output
VT EMS	VT Meter plus energy meter Package.
VTP EMS	VTP Meters plus Energy meter package.

PROBE LENGTH

LS	Standard Probe
LC	Compact Prode (available only for compressions fitting connections CM, CF, CG and CH
LE	Extended Probe (consult factory if for PMR, PFR, PGR or PHR)

ELECTRONICS ENCLOSURE

E2	NEMA 4x Enclosure. Mounted on Probe.
E4 ( )	Remote Electronics NEMA 4x (IP65) includes NEMA 4x (IP65) on probe . Specify cable length in parentheses, maximum 50ft (17m).

DISPLAY OPTION

NR	No Display
DD	Digital Display

INPUT POWER

PV1L	12-36 VDC LOOP POWERED (available only with V4LH).
PV1	12-36 VDC
PS	100-240 VAC, 50/60 Hz Line Power, 25 Watts

OUTPUT POWER

V4LH	One analog output (4-20mA), one pulse, HART, LOOP POWERED
V4H	One analog output (4-20 mA), one alarm, one pulse HART Communication, NOT LOOP POWERED.
V4M	One analog output (4-20 mA), one alarm, one pulse and MODBUS
V6M	Three analog outputs (4-20 mA), three alarms, one pulse and MODBUS
V6H	Three analog outputs (4-20 mA), three alarms, one pulse and HART Protocol Communication.

PROCESS TEMPERATURE

ST	Standard Temerature. Process temperature -40° to 500°F (-40° to 220°C)
HT	High Temerature. Process temperature -40° to 750°F (-40° to 400°C)

ACCESSORIES (Consult Factory) Removable Retractors, Isolated Gate Valves, Mounting Kits, Material Certificates, Pressure Certificates, Certificate of Conformance, NACE Certification

Ordering the Model 241Insertion

241	*	*	*	*	*	*	*	

*From Previous Page

PROCESS CONNECTION

CM Compression Fitting
2-inch Male NPT, 600 lb pressure rating.

CF Compression Fitting
2-inch 150 lb Flange.

CG Compression Fitting
2-inch 300 lb Flange.

CH Compression Fitting
2-inch 600 lb Flange.

PM Packing Gland
2-inch Male NPT, 50 psig (3.5 barg) maximum process pressure without removable retractor.

PMR Packing Gland
2-inch Male NPT with Retractor, 600 lb pressure rating.

PMR-LE Packing Gland
2-inch Male NPT with Retractor, 600 lb pressure rating. (for LE)

PF Packing Gland
2-inch 150 lb Flange, 50 psig (3.5 barg) maximum process pressure without removable retractor

PFR Packing Gland
2-inch 150 lb Flange with Retractor

PFR-LE Packing Gland 2-inch 150 lb Flange with Retractor
For use with Extended probe length (see LE option)

PG Packing Gland
2-inch 300 lb Flange, 50 psig (3.5 barg) maximum process pressure without removable retractor.

PGR Packing Gland
2-inch 300 lb Flange with Retractor

PGR-LE Packing Gland 2-inch 300 lb Flange with Retractor
For use with Extended probe length (see LE option)

PH Packing Gland
2-inch 600 lb Flange, 50 psig (3.5 barg) maximum process pressure without removable retractor

PHR Packing Gland
2-inch 600 lb Flange with Retractor

PHR-LE Packing Gland 2-inch 600 lb Flange with Retractor
For use with Extended probe length (see LE option)

CFD Compression Fitting
DN50/PN16 Flange.

CGD Compression Fitting
DN50/PN40 Flange.

CHD Compression Fitting
DN50/PN64 Flange.

PFD Packing Gland
DN50/PN16 Flange, 50 psig (3.5 barg) maximum process pressure

PFDR Packing Gland
DN50/PN16 Flange, with retractor.

PFDR-LE Packing Gland
DN50/PN16 Flange, with retractor. For use with Extended probe length (see LE option)

PGD Packing Gland
DN50/PN40 Flange, 50 psig (3.5 barg) maximum process pressure

PGDR Packing Gland
DN50/PN40 Flange, with retractor.

PGDR-LE Packing Gland
DN50/PN40 Flange, with retractor. For use with Extended probe length (see LE option)

PHD Packing Gland
DN50/PN64 Flange, 50 psig (3.5 barg) maximum process pressure

PHDR Packing Gland
DN50/PN64 Flange, with retractor.

PHDR-LE Packing Gland
DN50/PN64 Flange, with retractor. For use with Extended probe length (see LE option)

SIERRA® INSTRUMENTS
THE MASS FLOW COMPANY

q

Sierra Instruments, North America • 5 Harris Court, Building L • Monterey, California • (800) 866-0200 • (831) 373-0200 • Fax (831) 373-4402 • www.sierrainstruments.com
Sierra Instruments, Europe • Bijlmansweid 2 • 1934RE Egmond aan den Hoef • The Netherlands • +31 72 5071400 • Fax: +31 72 5071401
Sierra Instruments, Asia • Rm.618,Tomson Centre, Bldg. A • 188 Zhang Yang Road • Pu Dong New District • Shanghai, P.R. China 200122 • +8621 5879 8521/22 • Fax: +8621 5879 8586